PAYLOAD	=	15770	
TRAILER TARE MASS	=	4700	
TRAILER GROSS MASS	=	20470	

PAYLOAD	=	21030	
TRAILER TARE MASS	=	5100	
TRAILER GROSS MASS	=	26130	

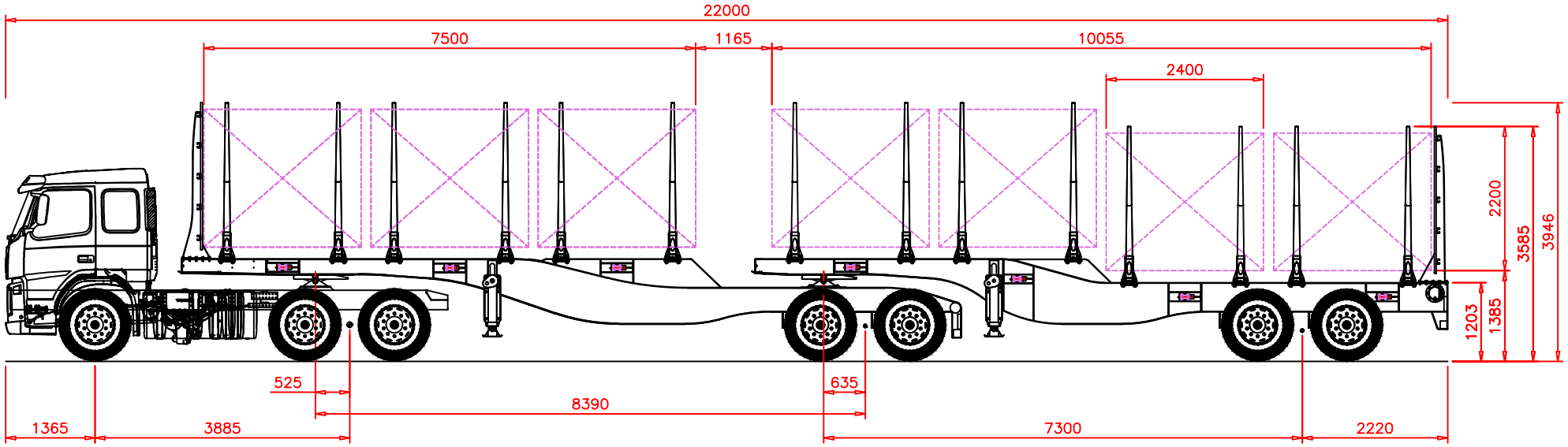

5400	=	TRUCK TARE AT AXLES	=	4000			
7390	=	GROSS MASS AT AXLES	=	16730			

		TARE MASS AT AXLES	=	2670			
		GROSS MASS AT AXLES	=	15990			

		TARE MASS AT AXLES	=	3680			
		GROSS MASS AT AXLES	=	15890			

		LEGAL	+2%
PAYLOAD	=	36800kg	37920kg
GROSS COMBINATION MASS	=	56000kg	57120kg

REVISION			
REV	DATE	BY	REVISION DESCRIPTION

ROADHOG
TRAILERS (PTY) LTD
design@roadhogtt.co.za

COPYRIGHT
THIS DRAWING IS CONFIDENTIAL AND THE PROPERTY OF ROADHOG TRAILERS AND MAY NOT BE COPIED, REPRODUCED OR PASSED ON TO ANY THIRD PARTY WITHOUT THEIR WRITTEN CONCENT.

	NAME	DATE
DRAWN	DJO	7/7/15
CHECKED		

SCALE: N.T.S.

TITLE:
TIMBER INTERLINK COMBINATION
SAF AIR, DUAL TYRES, ALU RIMS

ALL DIMENSIONS, MASSES AND PAYLOADS ARE ESTIMATES AND EXCLUDE OPTIONAL EXTRAS.

DRAWING No: TLC—01—0001 | SHT 1 OF 1